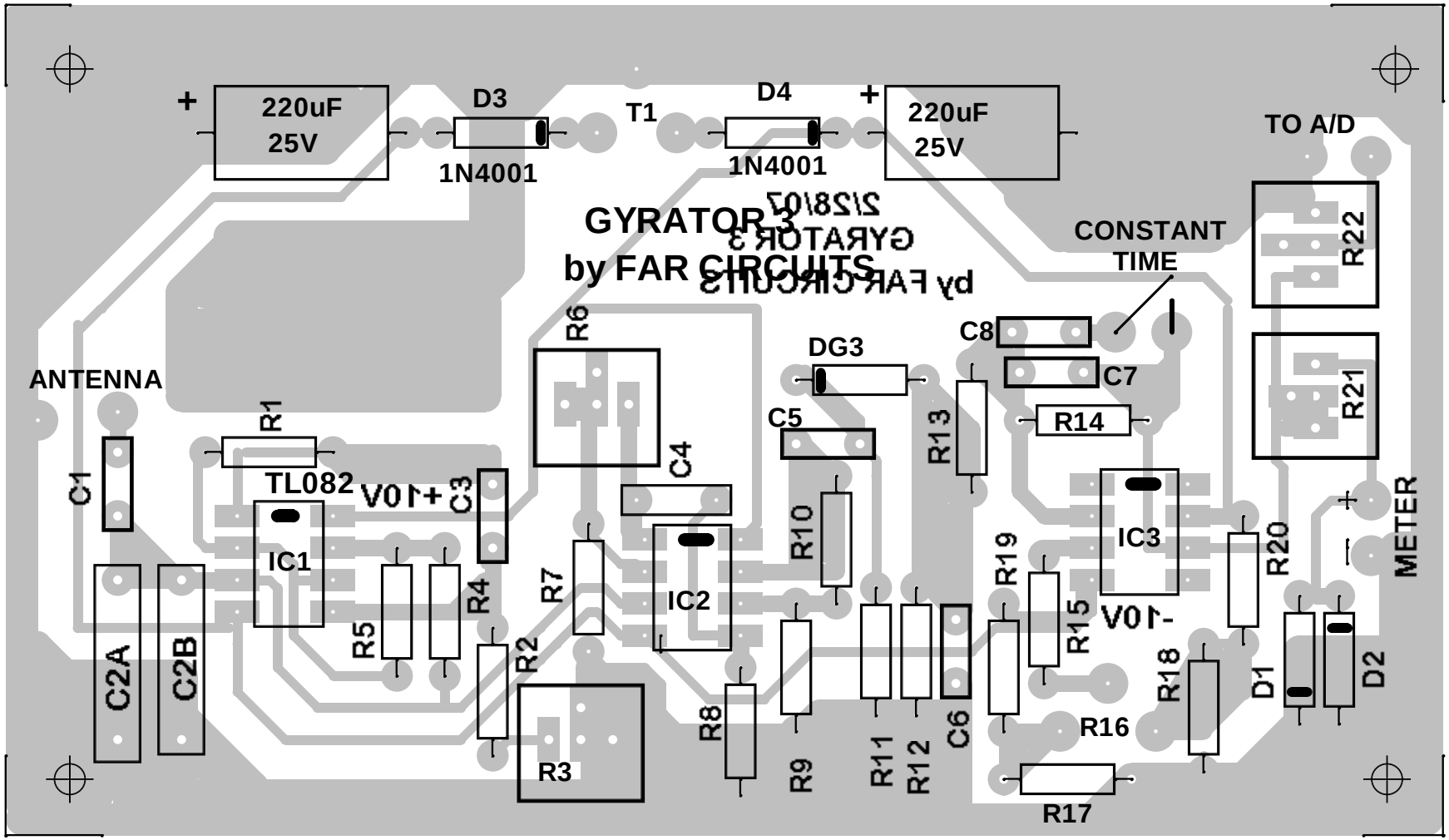
GYRATOR 3
by FAR CIRCUITS
+
220uF
25V
D3
1N4001
T1
D4
1N4001
+
220uF
25V
TO A/D
CONSTANT
TIME
R22
R21
ANTENNA
C1
R1
TL082
+10V
C3
IC1
R5
R4
R2
R3
R6
R7
C4
IC2
C5
DG3
R10
R9
R8
R11
R12
C6
R13
C8
C7
R14
R19
R15
R16
R17
IC3
-10V
R18
R20
D1
D2
METER
C2A
C2B